*** NOTE:**
THIS JDR-100 STANDARDIZATION DESIGN HAS THE HELIUM FILL PORT AND INSTRUMENTATION PORT ON THE DILUTION REFRIGERATOR INSERT TOP FLANGE FOR CUSTOMER'S SYSTEM WITHOUT A MAGNET.
IF THE CUSTOMER'S SYSTEM INCLUDES A MAGNET, THE HELIUM FILL PORT AND INSTRUMENTATION PORT WILL BE LOCATED ON THE MAGNET SUPPORT TOP FLANGE.
THEREFORE, THE DILUTION REFRIGERATOR INSERT TOP FLANGE WILL BE REDUCED TO 8.125" DIAMETER AND THE RADIATION BAFFLES WILL BE REDUCED TO 6.50" DIAMETER.

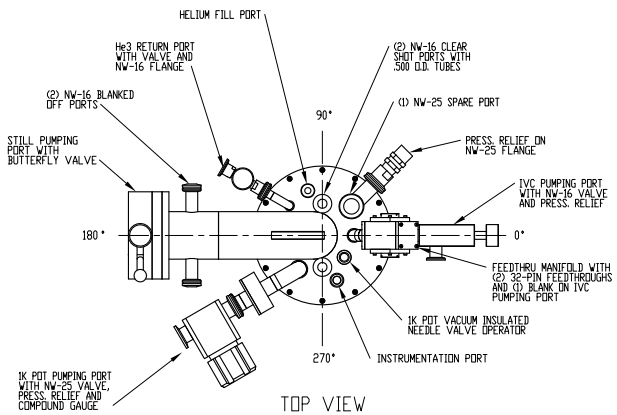

TOP VIEW
INSERT TOP FLANGE

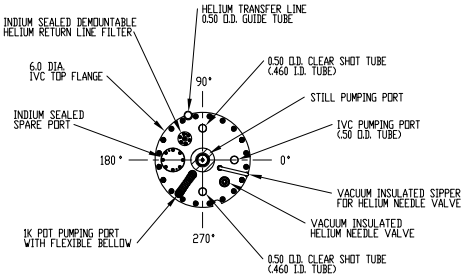

SECTION A-A
IVC TOP FLANGE

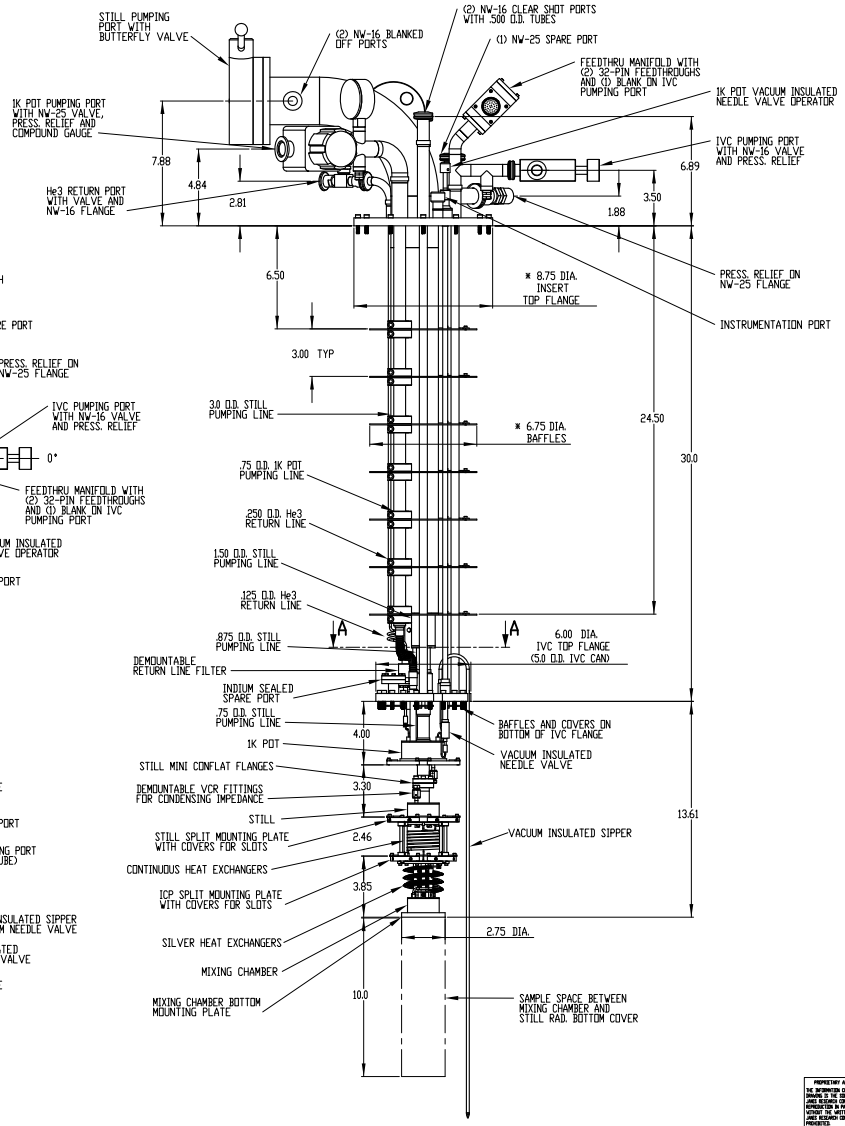

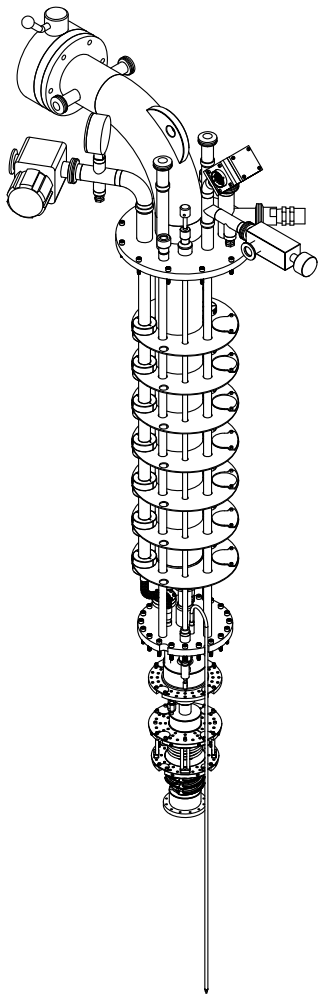

PROPRIETARY AND CONFIDENTIAL
THE INFORMATION CONTAINED IN THIS DRAWING IS THE SOLE PROPERTY OF JANIS RESEARCH COMPANY, INC. ANY REPRODUCTION IN PART OR AS A WHOLE WITHOUT THE WRITTEN PERMISSION OF JANIS RESEARCH COMPANY, INC. IS PROHIBITED.

				NAME	DATE	
		UNLESS OTHERWISE SPECIFIED: DIMENSIONS ARE IN INCHES TOLERANCES: FRACTIONAL ±1/32 ANGULAR: MACH ± BEND ± DIG PLACE DECIMAL ±.03 TWO PLACE DECIMAL ±.010 THREE PLACE DECIMAL ±.005 INTERPRET GEOMETRIC TOLERANCING PER: MATERIAL: FINISH:	DRAWN	LC	02/13/08	JANIS RESEARCH CO., INC.
			CHECKED			TITLE: JDR-100-DP DILUTION REFRIGERATOR SYSTEM STANDARD (FOR SALES PRESENTATION)
			ENG APPR.			
			MFG APPR.			
			Q.A.			
			COMMENTS:			SIZE D DWG. NO. D02-13-08E REV
NEXT ASSY	USED ON					SCALE: 0.7 WEIGHT: SHEET 1 OF 1
APPLICATION						

D | JDR100dp-sys-Pkw | REV