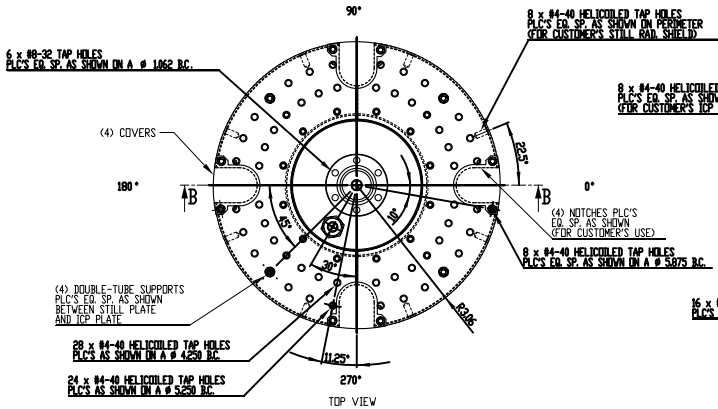

TOP VIEW

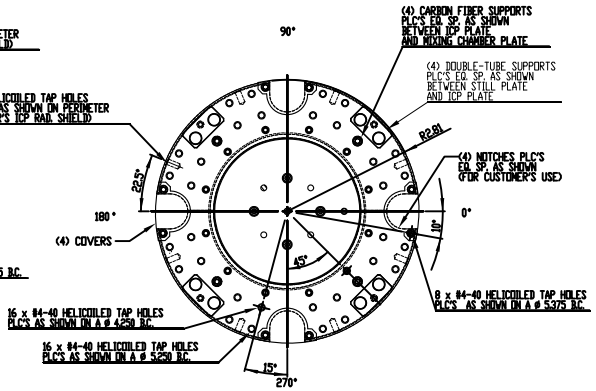

SECTION A-A
SCALE 1 : 1.2

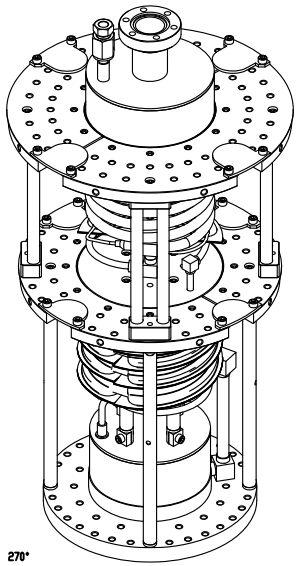

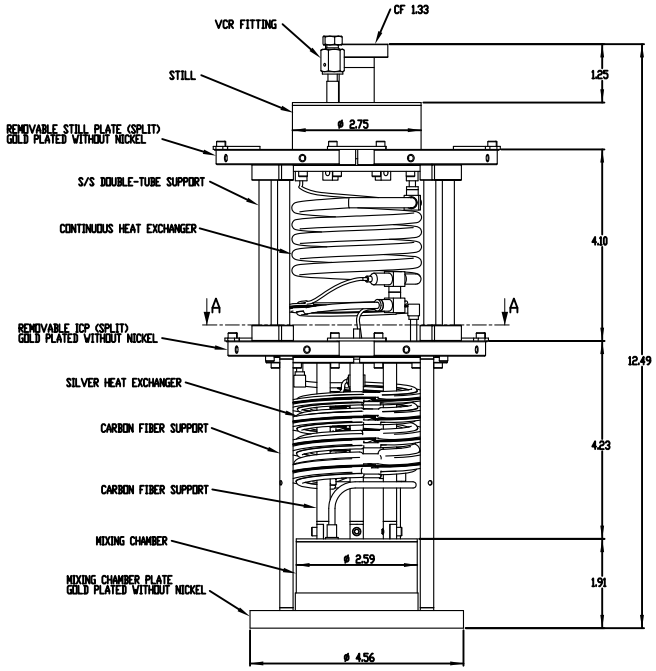

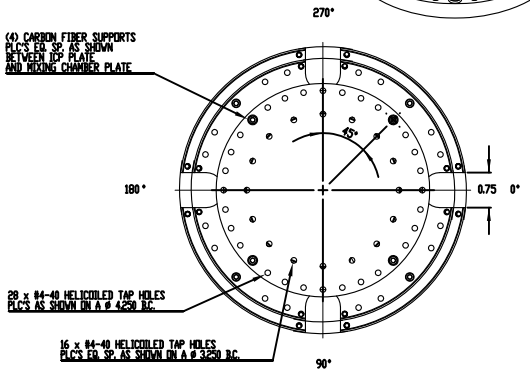

BOTTOM VIEW

NOTE:
ALL HELICAL INSERTS ARE 18-8 STAINLESS STEEL MATERIAL

PROPRIETARY AND CONFIDENTIAL
THE INFORMATION CONTAINED IN THIS DRAWING IS THE SOLE PROPERTY OF JANIS RESEARCH COMPANY, INC. ANY REPRODUCTION IN PART OR WHOLE WITHOUT THE WRITTEN PERMISSION OF JANIS RESEARCH COMPANY, INC. IS PROHIBITED.

		UNLESS OTHERWISE SPECIFIED:		NAME	DATE
		DIMENSIONS ARE IN INCHES	DRAWN	DD	02/14/08
		TOLERANCES:	CHECKED		
		ANGULAR: ±0.72	ENG APPR.		
		ANGULAR: MACH ±	MFG APPR.		
		TWO PLACE DECIMAL ±0.03	Q.A.		
		THREE PLACE DECIMAL ±0.005	COMMENTS:		
		INTERPRET GEOMETRIC TOLERANCING PER:			
		MATERIAL			
		FINISH			
NEXT ASSY	USED ON				
APPLICATION					

JANIS RESEARCH CO., INC.

TITLE: JDR-500-DP-STAGE STANDARD (SALES PRESENTATION)

SIZE D | DWG. NO. D02-14-08D | REV

SCALE: 1:2 | WEIGHT: | SHEET 1 OF 1

D | D02-14-08D | REV