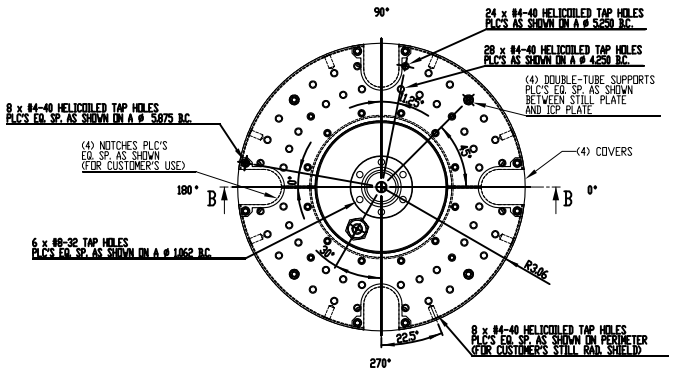

TOP VIEW

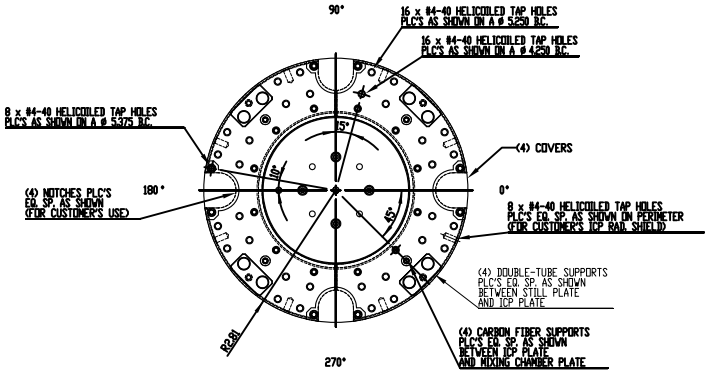

SECTION A-A
SCALE 1 : 1.2

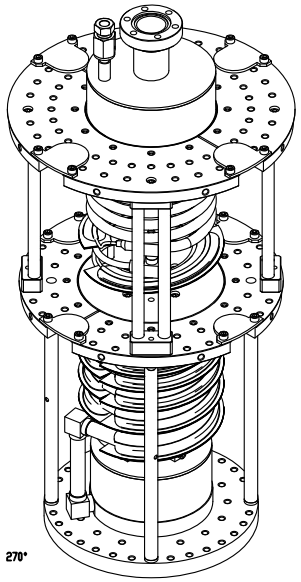

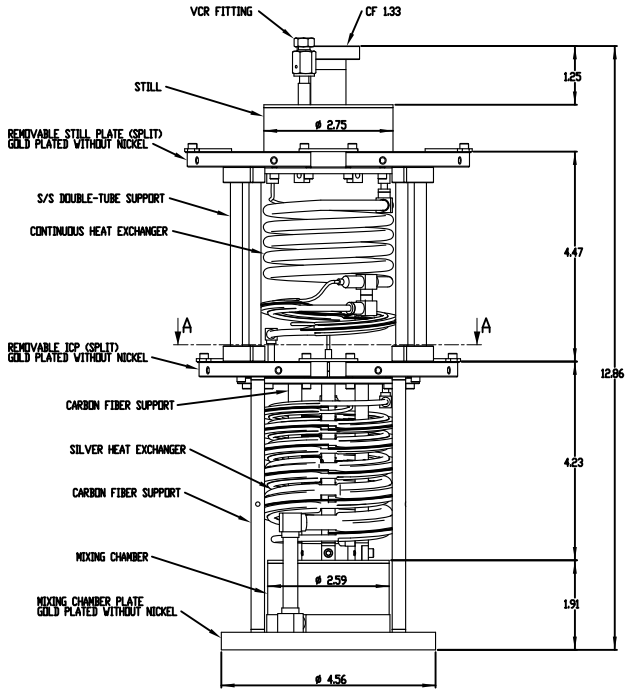

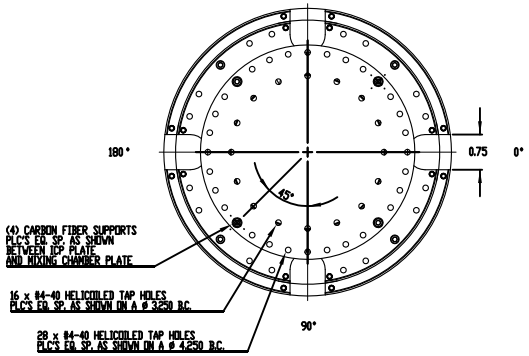

BOTTOM VIEW

NOTE:
-ALL HELICAL INSERTS ARE 18-8 STAINLESS STEEL MATERIAL

PROPRIETARY AND CONFIDENTIAL
THE INFORMATION CONTAINED IN THIS DRAWING IS THE SOLE PROPERTY OF JANIS RESEARCH COMPANY, INC. ANY REPRODUCTION IN PART OR AS A WHOLE WITHOUT THE WRITTEN PERMISSION OF JANIS RESEARCH COMPANY, INC. IS PROHIBITED.

NEXT ASSY	USED ON	UNLESS OTHERWISE SPECIFIED: DIMENSIONS ARE IN INCHES TOLERANCES: FRACTIONAL ±1/32 ANGULAR: MACH ± BEND ± TWO PLACE DECIMAL ±.03 THREE PLACE DECIMAL ±.005 FOUR PLACE DECIMAL ±.0005 INTERPRET GEOMETRIC TOLERANCING PER: MATERIAL: FINISH:	DRAWN	DD 02/14/08
			CHECKED	
			ENG APPR.	
			MFG APPR.	
			Q.A.	
			COMMENTS:	

APPLICATION

JANIS RESEARCH CO., INC.

TITLE: JDR-750-DP-STAGE STANDARD (SALES PRESENTATION)

SIZE D | DWG. NO. D02-14-08F | REV

SCALE: 1:2 | WEIGHT: | SHEET 1 OF 1

REV		
D	D02-14-08F	